Fantech

Your Ventilation Solutions Company

Heat Recovery Ventilator

Model SHR 2005R

FEATURES

- Compact design
- Backward curved blade motors
- Electrostatic filters (washable)
- Aluminum heat recovery core
- External screw type dry contacts
- Improved core guide channels for easy removal of core

OPTIONAL CONTROLS

- Eco-Touch – Programmable Touch Screen Wall Control
- EDF1 – On/Off, Low, High Speed Operation and 20 min. On/40 min. Off Cycle Timer
- RTS3 – Intermittent Bathroom Timer with Settings for 20/40/60 Minutes of High Speed Boost
- MDEH 2 – Mechanical low voltage dehumidistat with On/Off switch
- MDEH 2 – Mechanical low voltage dehumidistat
- RTS 2 – 15 Minute pushbutton timer
- EDF1R – Multi-function command

WARRANTY

- 7 year on motors
- 5 year on parts
- Lifetime on core (limited)

Distributed by:

Fantech, reserves the right to modify, at any time and without notice, any or all of its products' features, designs, components and specifications to maintain their technological leadership position.

SPECIFICATIONS

CASE 22 gauge galvanized steel. Powder coated finish, antique white. Insulated with 1" (25 mm) foil-faced high density polystyrene foam to prevent condensation and meet the requirements of the Underwriters Laboratories 94HF.

MOTORS Two (2) German-engineered, factory-balanced ebm™ motors with backward curved blades. Motors come with permanently lubricated sealed bearings guarantee long life and maintenance-free operation. Seven (7) year warranty.

FILTERS Two (2) Washable Electrostatic Panel Type Air Filters, 11.75" (298mm) x 15" (380mm) x 0.125" (3mm).

CORE A aluminum heat recovery core configured for an efficient cross-flow ventilation. Core is 12" x 12" (305 x 305 mm) with a 15" (380 mm) depth. Cores are manufactured to withstand extreme temperature variations.

CONTROLS External three (3) position (Low/Stand By/Medium) rocker switch that will offer continuous ventilation. Fantech offers a variety of external controls. (see optional controls)

AIRFLOW BALANCING Screw type dial on electrical box allows supply airflow to be adjusted to match exhaust airflow.

DEFROST During the defrost sequence, a motorized damper temporarily blocks the incoming fresh air stream so that the warm air from the house can circulate through the HRV. The exhaust blower shuts down and the supply blower switches into high speed to maximize the effectiveness of the defrost strategy. During this cycle, household odors from the kitchen or bathroom are prevented from entering the home and the unit will not create negative pressure.

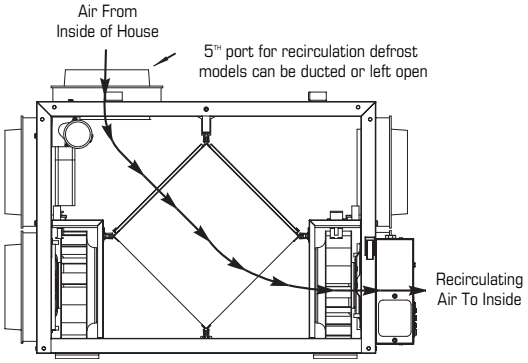

INSTALLATION Unit is typically hung by using installation kit supplied with unit. Mounting bolts provided on top four (4) corners of unit.

SERVICEABILITY Core, filters, motors and drain pan can be easily serviced through latched access door located on front of the cabinet. Core conveniently slides out with ease on an improved railing system. Electrical box, placed on the outside of the unit, can also be easily accessed.

Dimensions & Airflow - All units feature three foot plug-in power cord with 3-prong plug.

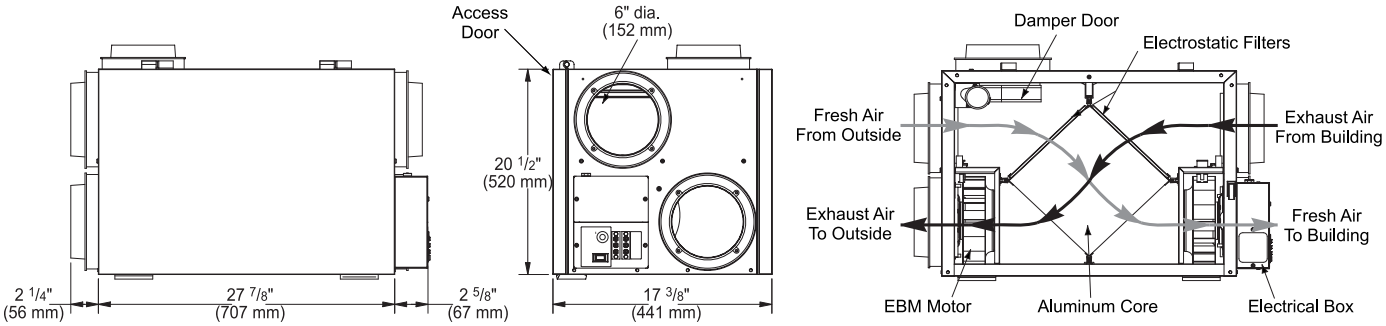

Ventilation Performance

EXT. STATIC PRESSURE		NET SUPPLY AIR FLOW		GROSS AIR FLOW SUPPLY		GROSS AIR FLOW EXHAUST	
Pa	in wg	L/s	cfm	L/s	cfm	L/s	cfm
25	0.1	114	243	116	246	120	254
50	0.2	109	230	110	233	115	244
75	0.3	103	218	104	221	106	225
100	0.4	95	201	96	204	101	215
125	0.5	86	182	87	185	94	199
150	0.6	78	166	79	168	87	184
175	0.7	71	151	72	154	79	168
200	0.8	65	137	66	139	71	151
225	0.9	59	125	60	127	64	136
250	1.0	53	112	53	113	51	118
275	1.1	46	98	47	99	51	108
300	1.2	42	88	42	90	44	93
325	1.3	37	78	37	79	39	83
350	1.4	31	66	32	67	35	75
375	1.5	26	55	26	56	30	63

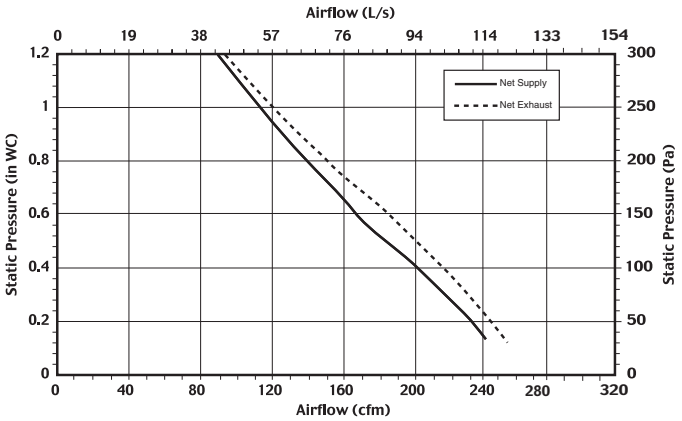

Energy Performance

	SUPPLY TEMPERATURE		NET AIRFLOW		POWER CONSUMED WATTS	SENSIBLE RECOVERY EFFICIENCY	APPARENT SENSIBLE EFFECTIVENESS	LATENT RECOVERY/MOISTURE TRANSFER
	ÞC	ÞF	L/s	cfm				
Heating	0	32	31	65	108	62	77	0.06
	0	32	55	117	154	62	74	0.07
	0	32	90	191	246	60	71	0.00
	-25	-13	59	126	141	64	81	0.01

Specifications and Ratings

- Model: SHR 2005R
- Total assembled weight: 61 lbs
- Cabinet: 22 ga. steel w/ powder coat finish
- Motors: ebm motor w/backward curved blades
- Filters: 2 washable electrostatic filters
  11.75" (298mm) x 15" (380mm) x 0.125" (3mm)
- Insulated with 1" (25 mm) foil-face high density polystyrene foam to prevent condensation and meet the requirements of the Underwriters Laboratories 94HF.
- Core: Aluminum
  12" (305mm) x 12" (305 mm) x 15" (380 mm)
- Supply & exhaust ducts: 6" (152.4mm)
- Mounting: Suspended by chains & hooks
- Electrical requirements:

Volts	Frequency	Amps	Watts	High Speed
120V	60Hz	2.1A	150W	

3' plug-in power cord w/ 3-prong plug

Contacts

Submitted by: Date:

Qty: Model #:

Comments:

Project #:

Location:

Architect:

Engineer:

Contractor:

Fantech

Unites States
10048 Industrial Blvd.
Lenexa, KS 66215
Phone: 800.747.1762;
913.752.6000
Fax: 800.487.9915;
913.752.6466

www.fantech.net

Canada
50 Kanalflakt Way,
Bouctouche, NB E4S 3M5
Phone: 800.565.3548
506.743.9500
Fax: 877.747.8116
506.743.9600

Info@fantech.net

Article #: 403790
Rev Date: 031113