Fantech

Heat Recovery Ventilator
Model VHR 2004

FEATURES:
- Compact design
- Backward curved blade motors
- Electrostatic filters (washable)
- Aluminum heat recovery core
- External screw type dry contacts
- Improved core guide channels for easy removal of core

OPTIONAL CONTROLS:
- ECO-Touch - Programmable Touch Screen Wall Control
- EDF 1 - Multi-Function control
- RTS 3 - 20/40/60 minute over-ride
- MDEH 1 - Mechanical low voltage dehumidistat
- MDEH 2 - Mechanical low voltage dehumidistat ON/OFF switch
- RTS 2 - 20 minute timer

WARRANTY:
- 7 year on motors
- 5 year on parts
- Lifetime on core (limited)

DISTRIBUTED BY:

SPECIFICATIONS

CASE: 22 gauge galvanized steel. Powder coated finish, antique white. Insulated with 1" (25 mm) foil-faced high density polystyrene foam.

MOTORS: Two (2) German-engineered, factory-balanced ebm™ motors with backward curved blades. Motors come with permanently lubricated sealed bearings guarantee long life and maintenance-free operation. Seven (7) year warranty.

FILTERS: Two (2) Washable Electrostatic Panel Typed Air Filter, 11.75" (298mm) x 15" (380mm) x 0.125" (3mm).

CORE: A aluminum heat recovery cores configured for an efficient cross-flow ventilation. Cores are 12" x 12" (305mm x 305 mm) with a 15" (380 mm) depth. Cores are manufactured to withstand extreme temperature variations.

DEFROST: A preset defrost sequence is activated at an outdoor air temperature of 23^{0}F (-5^{0}C) and lower. During the defrost sequence, the supply blower shuts down & the exhaust blower switches into high speed to maximize the effectiveness of the defrost strategy. The unit then returns to normal operation, and continues cycle.

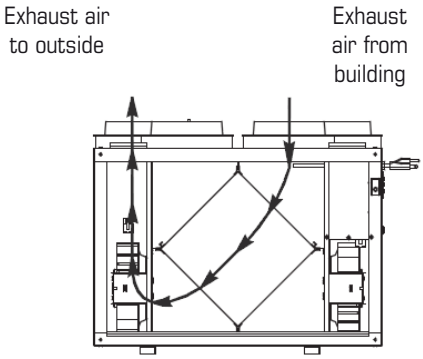

CONTROL: External three (3) position (Low/Stand By/Medium) rocker switch that will offer continuous ventilation. Fantech offers a variety of external controls. (see optional controls)

SERVICEABILITY: Core, Filters, motors and drain pan can be easily serviced through latched access door. Cores conveniently slides out with ease on improved railing system.

INSTALLATION: Unit is typically hung by using installation kit supplied with unit. Mounting bolts provided on top four (4) corners of unit.

Dimensions and Airflow - All units feature three foot plug-in power cord with 3-prong plug.

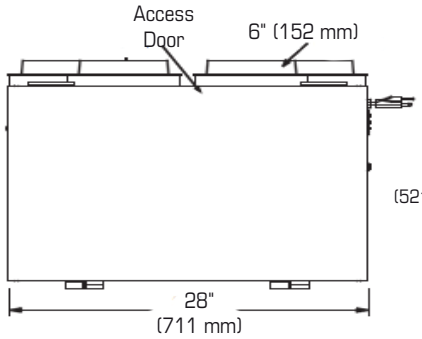

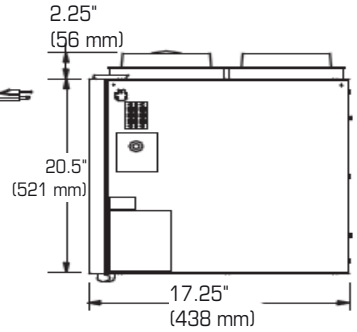

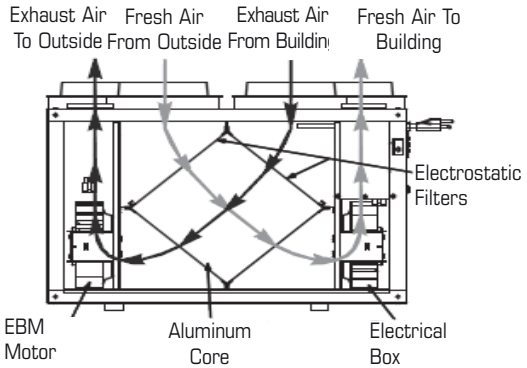

Ventilation Performance

NORMAL SPEED							
EXT. STATIC PRESSURE		NET SUPPLY AIR FLOW		GROSS AIR FLOW SUPPLY		GROSS AIR FLOW EXHAUST	
Pa	in wg	L/s	cfm	L/s	cfm	L/s	cfm
25	0.1	114	243	116	246	120	254
50	0.2	109	230	110	233	115	244
75	0.3	103	218	104	221	106	225
100	0.4	95	201	96	204	101	215
125	0.5	86	182	87	185	94	199
150	0.6	78	166	79	168	87	184
175	0.7	71	151	72	154	79	168
200	0.8	65	137	66	139	71	151
225	0.9	59	125	60	127	64	136
250	1.0	53	112	53	113	56	118
275	1.1	46	98	47	99	51	108
300	1.2	42	88	42	90	44	93
325	1.3	37	78	37	79	39	83
350	1.4	31	66	32	67	35	75
375	1.5	26	55	26	56	30	63

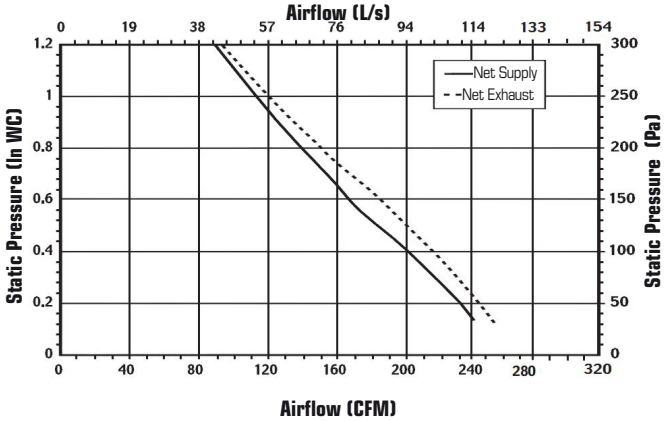

Energy Performance

	SUPPLY TEMPERATURE		NET AIRFLOW		POWER CONSUMED WATT	SENSIBLE RECOVERY EFFICIENCY	APPARENT SENSIBLE EFFECTIVENESS	LATENT RECOVERY/MOISTURE TRANSFER
	°C	°F	L/s	cfm				
Heating	0	32	31	65	108	62	77	0.06
	0	32	55	117	154	62	74	0.07
	0	32	90	191	246	60	71	0.00
	-25	-13	61	129	154	59	79	0.00

Specifications

- Model: VHR 2004
- Total assembled weight: 55 lbs (25 kg)
- Cabinet: 22 ga. steel w/ powder coat finish
- Motors: ebm motor w/backward curved blades
- Filters: 2 washable electrostatic filters 11.75" (298mm) x 15" (380mm) x 0.125: (3mm)
- High density polystyrene foam insulation
- Core: Aluminum 12" (305mm) x 12" (305mm) x 15" (380mm)
- Supply & exhaust ducts: 6" (152.4mm)
- Mounting: Suspended by chains and hooks
- Electrical requirements:

Volts	Frequency	Amps	Watts High Speed
120V	60Hz	2.1A	246W

3' plug-in power cord w/ 3-prong plus

Contacts

Submitted by: Date:

Qty: Model #:

Comments:

Project #:

Location:

Architect:

Engineer:

Contractor:

Fantech

Fantech, reserves the right to modify, at any time and without notice, any or all of its products' features, designs, components and specifications to maintain their technological leadership position

Canada
50 Kanalflakt Way,
Bouctouche, NB E4S 3M5
Tel: 800.565.3548; 506.743.9500
Fax: 877.747.8116; 506.743.9600

www.fantech.net; info@fantech.net

United States
10048 Industrial Blvd.
Lenexa, KS 66215
Tel: 800.747.1762; 913-752-6000
Fax: 877.487.9915; 913.752.6466

www.fantech.net; info@fantech.net

Item #: 403794
Rev Date: 031213