Fantech

Energy Recovery Ventilator

SE704N

S = Side discharge
E = Energy recovery
704 = 70cfm, 4 port design
N = No defrost & drain pan

Compact ERV with easy mount wall bracket. Brings a continuous supply of fresh air into a home while exhausting an equal amount of contaminated air. The enthalpic core at the center of the unit transfers heat and moisture from the incoming air to the outgoing air. The air brought into the living area is cooled and the humidity is reduced for maximum comfort. Reduces the load on a home's air conditioner to save on cooling costs.

FEATURES

- Super Compact Size
- Includes Easy-Mount Wall Bracket
- Enthalpy Core
- 4″ (100mm) Duct Connection
- No Balancing Required
- Unit Can Be Installed In Any Position
- No Defrost or Drain Pan Needed
- Easy Access Service Door
- 3' (914mm) Plug-in Power Cord
- Only 25 lbs (11 kg)
- Electrostatic Filters (washable)
- Easy Core Guide Channels For Removing Core
- Single Speed Ventilation

ACCESSORIES

- FTD 7 – 7 Day Digital Programmable Timer
- COM 4P – 4″ Weather Hoods (1 supply & 1 exhaust)
- FEL 4 – 4″ 90° Elbow
- CG 4 – 4″ Adjustable Grille

SPECIFICATIONS

CASE 24 gauge galvanized steel. Baked powder coated paint, antique white. Cabinet fully insulated with 1" (25 mm) aluminum foil-face high density polystyrene foam to prevent condensation and meet the requirements of the UL 94HF.

MOTORS Two (2) German-manufactured, factory-balanced ebm™ motors with backward curved blades. Motors come with permanently lubricated sealed ball bearings to guarantee long life and maintenance-free operation. Seven (7) year warranty. Steep fan curve requires no balancing.

CORE Enthalpy core configured for efficient cross-flow ventilation. Core is 8.5″ x 8.5″ (216 x 216 mm) with a 8″ (205 mm) depth. Cores are manufactured to withstand large temperature variations.

FILTERS Two (2) Washable Electrostatic Panel Type Air Filters, 8.5″ (216mm) x 8″ (203mm) x 0.125″ (3mm).

CONTROLS Unit is designed to operate continuously on a single speed. See FDT 7 under accessories or contact Tech Support for possible intermittent, line-voltage options.

SERVICEABILITY Core, filters, and motors can be easily accessed through latched door. Core conveniently slides out on our new easy glide core guides. 10″ (250mm) of clearance is recommended for removal of core.

DUCT CONNECTION 4″ (100mm) steel duct connections with rubber gasket for easy sealing.

WARRANTY Limited 5 year on Enthalpy core, 7 year on motors, and 5 year on parts.

Distributed by:

Fantech, reserves the right to modify, at any time and without notice, any or all of its products' features, designs, components and specifications to maintain their technological leadership position.

Dimensions & Airflow - All units feature three foot plug-in power cord with 3-prong plug.

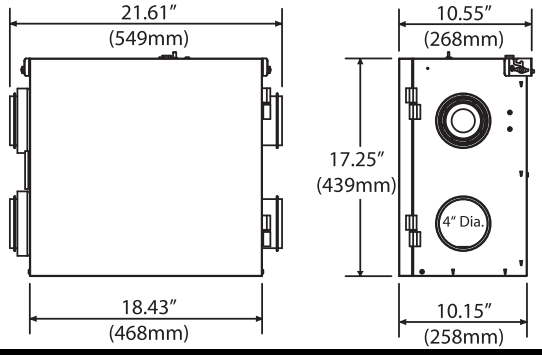

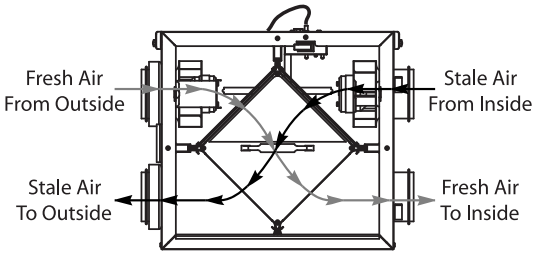

- Continuous ventilation mode of supply and exhaust airstreams
- 10″ (254mm) of clearance is recommended for removal of core

Ventilation Performance

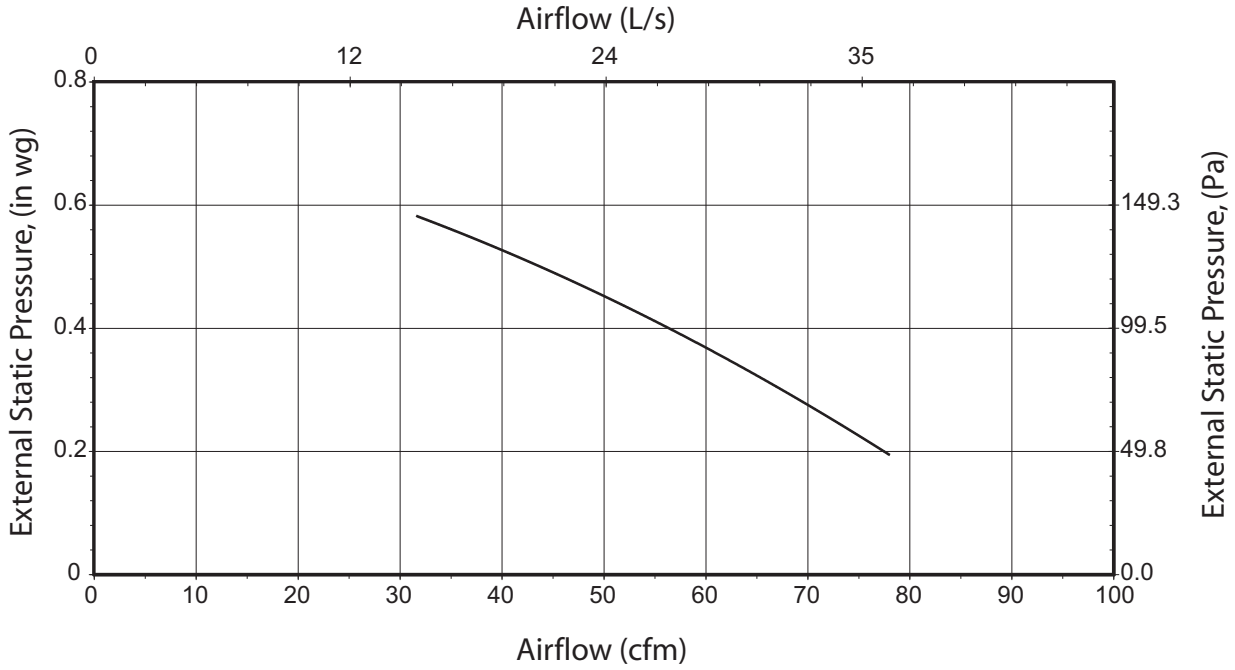

Specifications and Ratings

- Model: SE704N
- Total assembled weight: 25 lbs (11kg)
- Cabinet: 24 ga. steel w/powder coat finish
- Motors: ebm motors w/backward curved blades
- Filters: 2 washable electrostatic filters
  8.5″ (216mm) x 8″ (205mm) x 0.125″ (3mm)
- Insulated with 1" (25 mm) aluminum foil-face high density polystyrene foam to prevent condensation and meet the requirements of the UL 94HF.
- Core: Enthalpy
  8.5″ (216mm) x 8.5″ (216mm) x 8″ (205mm)
- Supply & exhaust ducts: 4″ (100mm)
- Mounting: Wall bracket included
- Electrical requirements:

Volts	Frequency	Amps	Watts
115V	60Hz	0.36A	40W

3' plug-in power cord w/ 3-prong plug

Contacts

Submitted by:	Date:
Qty:	Model #:
Comments:	
Project #:	
Location:	
Architect:	
Engineer:	
Contractor:	

Fantech

United States
10048 Industrial Blvd.,
Lenexa, KS. 66215
(T) 1.800.747.1762
(F) 1.800.487.9915
(T) 1.913.752.6000
(F) 1.913.752.6466
www.fantech.net
info@fantech.net

Canada
50 Kanalflakt Way,
Bouctouche, NB E4S 3M5
(T) 1.800.565.3548
(F) 1.877.747.8116
(T) 1.506.743.9500
(F) 1.506.743.9600

Article #: 412122
Rev Date: 012011