Fantech

Your Ventilation Solutions Company

Air Ventilator

Model AEV 1000

FEATURES

- Compact design
- Backward inclined motorized impeller
- Synthetic filter (washable)
- External screw type dry contacts for optional controls

OPTIONAL CONTROLS

- MDEH 1 – Mechanical low voltage dehumidistat
- FD 30M – 30 Minute crank timer

WARRANTY

- 7 year on motor
- 5 year on parts

SPECIFICATIONS

CASE 22 gauge galvanized steel. Powder coated finish, antique white. Insulated with 1" (25 mm) polystyrene foam to prevent condensation.

MOTOR German-engineered, factory-balanced ebm™ backward inclined motorized impeller. Motor comes with permanently lubricated sealed bearings guarantee long life and maintenance free operation. Seven (7) year warranty.

FILTER Washable Synthetic Filter, 11.75" (298.5mm) x 12.88" (327.2mm) x 0.625" (15.88mm).

CONTROLS External three (3) position (Low/Standby/Medium) rocker switch that will offer continuous ventilation. Fantech offers a variety of external controls. (see optional controls)

INSTALLATION Unit is typically hung by using the installation kit supplied with unit. Mounting bolts provided on top four (4) corners of unit. Unit can also be hung in the basement or attic. (see illustrations below)

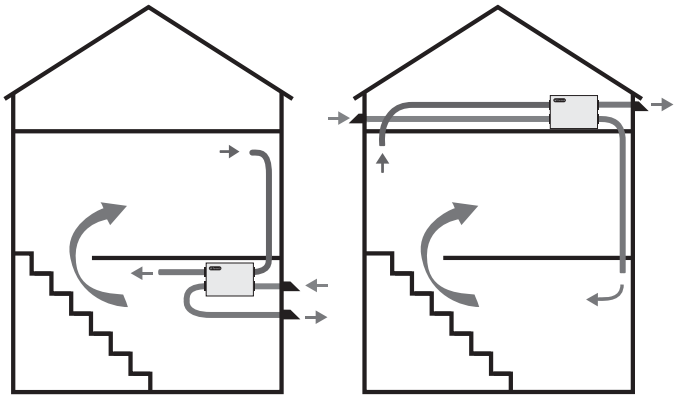

Basement **Attic**

SERVICEABILITY Filter can be easily serviced through access door located on front of the cabinet. Electrical box, with its panel located on the outside of the unit, can also be easily accessed.

Distributed by:

Fantech, reserves the right to modify, at any time and without notice, any or all of its products' features, designs, components and specifications to maintain their technological leadership position.

Dimensions & Airflow - All units feature three foot plug-in power cord with 3-prong plug.

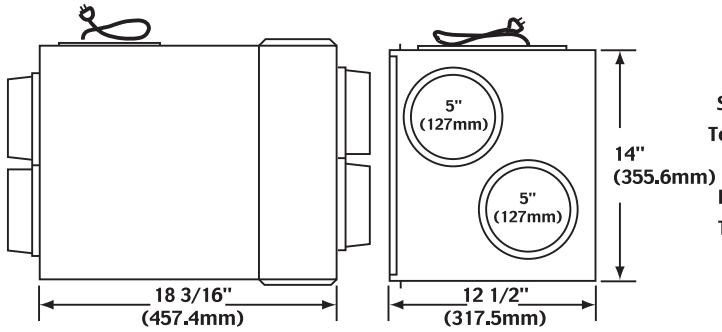

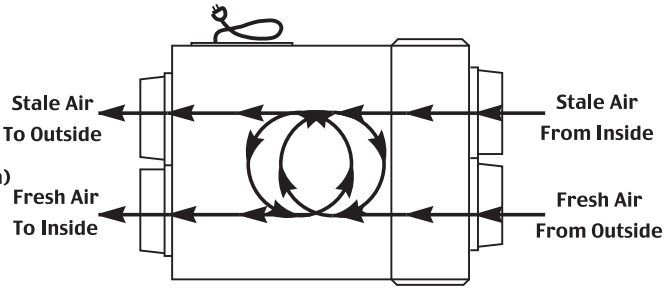

Ventilation Performance

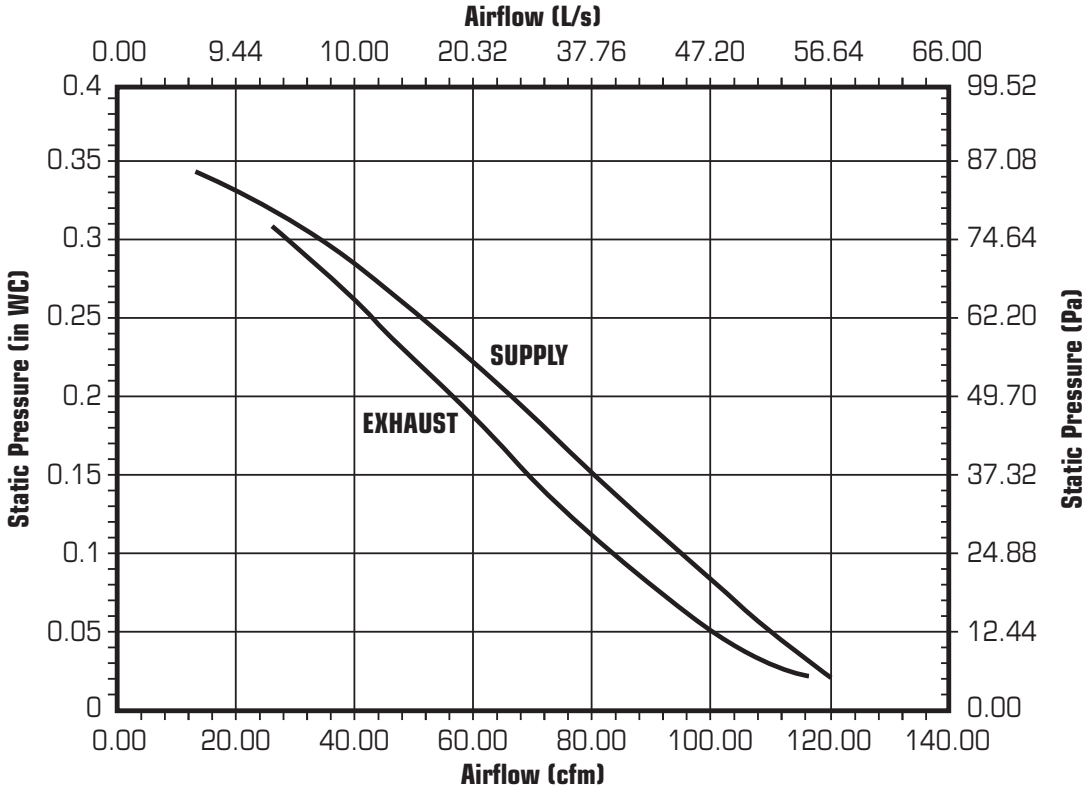

Specifications and Ratings

- Model: AEV 1000
- Total assembled weight: 22 lbs
- Cabinet: 22 ga. steel w/ powder coat finish
- Motors: ebm backward inclined motorized impeller
- Filter: washable synthetic filter 11.8" (299mm) x 12.9" (327mm) x 0.63" (16mm)
- Insulated with 1" (25 mm) high density polystyrene foam to prevent condensation and meet the requirements of the Underwriters Laboratories 94HF.
- Supply & exhaust ducts: 5" (127mm)
- Mounting: Suspended by chains & hooks
- Electrical requirements:

Volts	Frequency	Amps	Watts	High Speed
115V	60Hz	0.7A	81W	

3' plug-in power cord w/ 3-prong plug

Contacts

Submitted by:	Date:
Qty:	Model #:
Comments:	
Project #:	
Location:	
Architect:	
Engineer:	
Contractor:	

Fantech

United States
10048 Industrial Blvd.,
Lenexa, KS. 66215
Phone: 800.747.1762 913.752.6000
Fax: 800.487.9915; 913.752.6466
www.fantech.net
info@fantech.net

Canada
50 Kanalflakt Way
Bouctouche, NB E4S 3M5
Phone: 800.565.3548; 506.743.9500
Fax: 877.747.8116; 506.743.9600
www.fantech.net
info@fantech.net

Article #: 412123
Rev Date: 092410