Fantech

Your Ventilation Solutions Company

Heat Recovery Ventilator

Model SHR 3205RD

FEATURES

- Compact design
- Backward curved blade motors
- Electrostatic filters (washable)
- Aluminum heat recovery core
- External screw type dry contacts
- Access doors on two sides of the cabinet for multiple installation arrangements and for better serviceability
- Improved core guide channels for easy removal of core

OPTIONAL CONTROLS

- Eco-Touch – Programmable Touch Screen Wall Control
- EDF1 – Multi-function command
- EDF1R – Multi-function command
- MDEH 2 – Mechanical low voltage dehumidistat with On/Off switch
- MDEH 1 – Mechanical low voltage dehumidistat
- RTS 2 – 15 Minute pushbutton timer
- RTS3 – 20 Minutes timer

WARRANTY

- 7 year on motors
- 5 year on parts
- Lifetime on core (limited)

Distributed by:

Fantech reserves the right to modify, at any time and without notice, any or all of its products' features, designs, components and specifications to maintain their technological leadership position.

SPECIFICATIONS

CASE 22 gauge galvanized steel. Powder coated finish, antique white. Insulated with 1" (25 mm) foil-face high density polystyrene foam to prevent condensation.

MOTORS Four (4) ebm™ direct drive external rotor motors with backward-curved blades. Motors come with permanently lubricated ball bearings for reliable operation.

FILTERS Four (4) Washable Electrostatic Panel Type Air Filters, 11.5" (292mm) x 11.4" (290mm) x 0.125" (3mm).

CORE Two (2) modular aluminum heat recovery cores configured for an efficient cross-flow ventilation. Each core is 12" x 12" (305 x 305 mm) with a 11.5" (292 mm) depth. Cores are manufactured to withstand extreme temperature variations.

CONTROLS External three (3) position (Low/Stand By/Medium) rocker switch that will offer continuous ventilation. Fantech offers a variety of external controls. (see optional controls)

DEFROST During the defrost sequence, a motorized damper temporarily blocks the incoming fresh air stream so that the warm air from the house can circulate through the HRV. The exhaust blower shuts down and the supply blower switches into high speed to maximize the effectiveness of the defrost strategy. During this cycle, household odors from the kitchen or bathroom are prevented from entering the home and the unit will not create negative pressure.

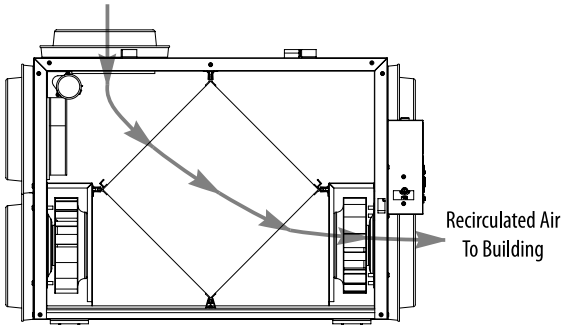

INSTALLATION Unit is typically hung by using installation kit supplied with unit. Mounting bolts provided on top four (4) corners of unit.

SERVICEABILITY Core, filters, motors and drain pan can be easily serviced through latched access doors located on front & back of the cabinet for multiple installation arrangements and for better serviceability. Core conveniently slides out with ease on an improved railing system. Electrical box, placed on the outside of the unit, can also be easily accessed.

Dimensions & Airflow - All units feature three foot plug-in power cord with 3-prong plug.

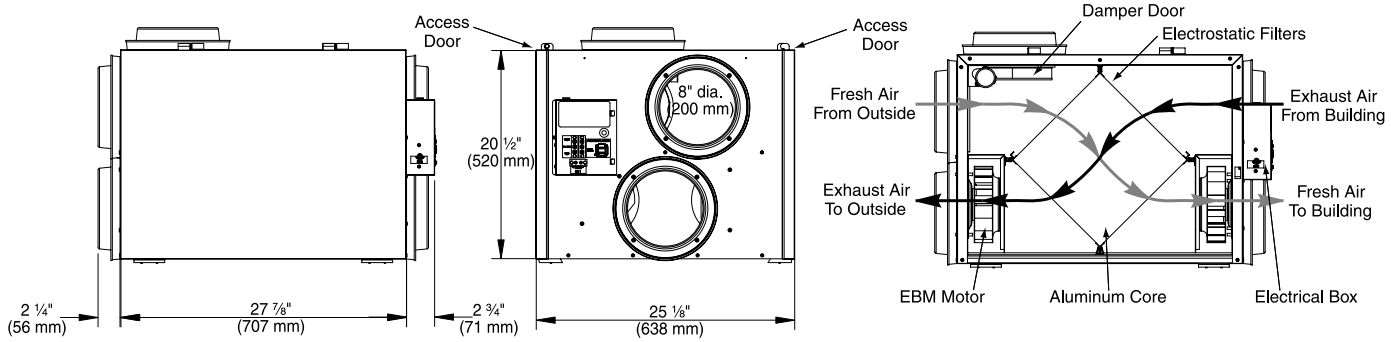

Ventilation Performance

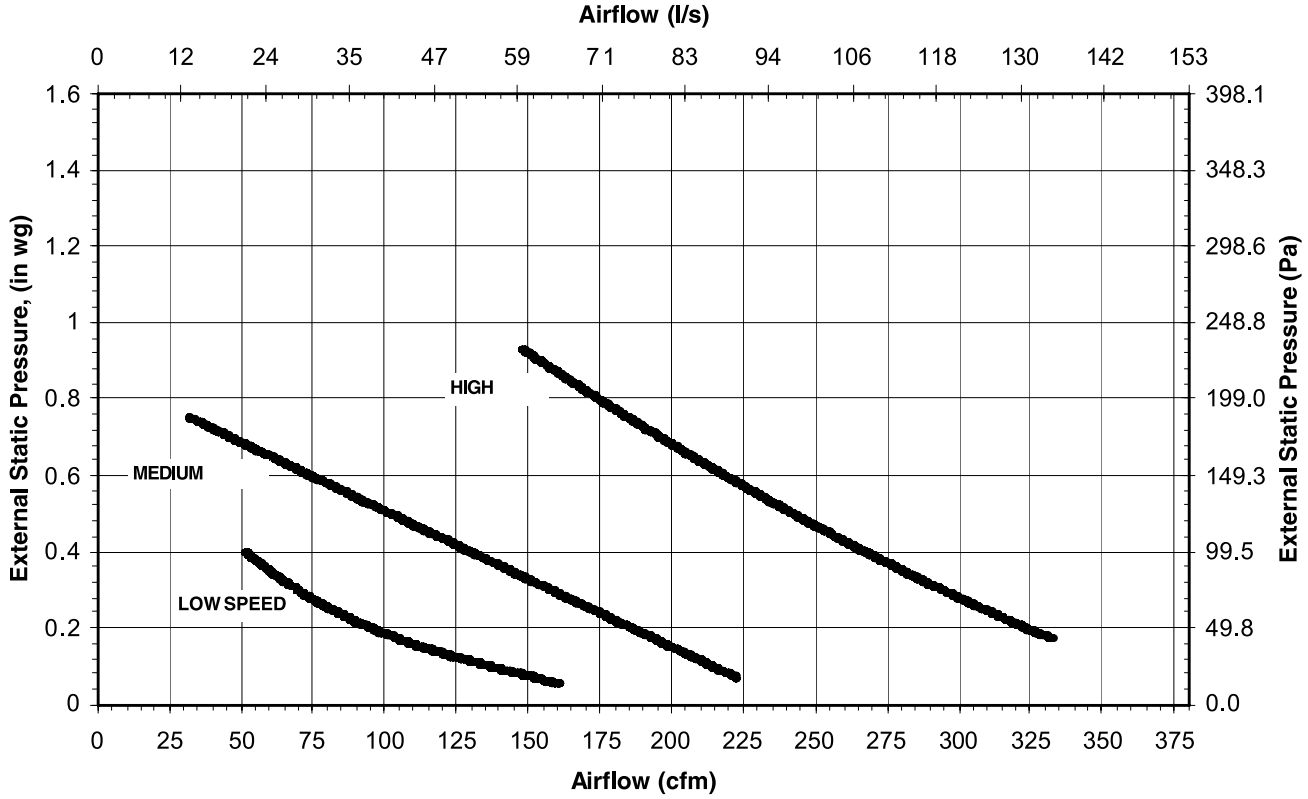

Specifications and Ratings

- Model: SHR 3205RD
- Total assembled weight: 80 lbs (36.3 Kg)
- Cabinet: 22 ga. steel w/ powder coat finish
- Motors: ebm motor w/backward curved blades
- Filters: 4 washable electrostatic filters
  11.5" (292mm) x 11.4" (290mm) x 0.125" (3mm)
- Insulated with 1" (25 mm) foil-face high density polystyrene foam to prevent condensation and meet the requirements of the Underwriters Laboratories 94HF.
- Core: Aluminum
  12" (305mm) x 12" (305mm) x 11.5" (292 mm)
- Supply & exhaust ducts: 8" (200mm)
- Mounting: Suspended by chains & hooks
- Electrical requirements:

Volts	Frequency	Amps	Watts	High Speed
115V	60Hz	2.5A	300W	

3' plug-in power cord w/ 3-prong plug

Contacts

Submitted by: Date:

Qty: Model #:

Comments:

Project #:

Location:

Architect:

Engineer:

Contractor:

Fantech

United States
10048 Industrial Blvd.,
Lenexa, KS 66215
(T) 1.800.747.1762
(F) 1.800.487.9915
(T) 1.913.752.6000
(F) 1.913.752.6466
www.fantech.net
info@fantech.net

Canada
50 Kanalflakt Way,
Bouctouche, NB E4S 3M5
(T) 1.800.565.3548
(F) 1.877.747.8116
(T) 1.506.743.9500
(F) 1.506.743.9600
www.fantech.net
info@fantech.net

Article #: 412124
Rev Date: 122712