Fantech

Heat Recover Ventilator

VHR 704

V = Vertical discharge
H = Heat recovery
R = Remote low voltage
704 = 70cfm, 4 port design

Compact top port design HRV with easy-mount wall bracket. Brings a continuous supply of fresh air into a home while exhausting an equal amount of contaminated air. HRVs use what is called a "sensible" heat recovery core. This special core transfers heat from the exhaust air stream to the incoming air stream. Fresh incoming air is tempered by the heat that is transferred from the outgoing air to save on energy costs. The VHR 704 is equipped with automatic defrost mechanisms so even if you live in the coldest climates you can use your HRV all year long.

FEATURES

- Super Compact Size
- Top Port Design Fits in Tight Spaces
- Includes Easy-Mount Wall Bracket
- Aluminum Heat Recovery Core
- 4" (100mm) Duct Connections
- No Balancing Required
- Easy Access Service Door
- 3' (914mm) Plug-in Power Cord
- Automatic Exhaust Defrost Allows Units to Always Stay in Ventilation Mode
- Only 26 lbs (12 kg)
- Electrostatic Filters (washable)
- Easy Core Guide Channels For Removing Core
- Multiple Speed Operation

ACCESSORIES

- ECO-Touch™ – Programmable Touch Screen Wall Control
- EDF1 – Multi-function control
- RTS3 – 20/40/60 minute over-ride
- RTS-2 – 15 minute over-ride
- COM 4P – 4" Weather Hoods (1 supply & 1 exhaust)
- FEL 4 – 4" 90° Elbow
- CG 4 – 4" Adjustable Grille

SPECIFICATIONS

CASE 24 gauge galvanized steel. Baked powder coated paint, grey. Cabinet fully insulated with 1" (25 mm) aluminum foilface high density polystyrene foam to prevent condensation and meet the requirements of the UL 94HF.

MOTORS Two (2) German-manufactured, factory-balanced ebm™ motors with backward curved blades. Motors come with permanently lubricated sealed ball bearings to guarantee long life and maintenance-free operation. Seven (7) year warranty. Steep fan curves requires no balancing of airflows.

CORE Aluminum heat recovery core configured for efficient cross-flow ventilation. Core is 8.5" x 8.5" (216 x 216 mm) with a 8" (205 mm) depth. Cores are manufactured by Fantech to withstand extreme temperature variations.

FILTERS Two (2) Washable Electrostatic Panel Type Air Filters, 8.5" (216mm) x 8" (203mm) x 0.125" (3mm).

CONTROLS Unit is designed to accommodate the whole series of Fantech HRV controls.

DEFROST A preset defrost sequence is activated at an outdoor air temperature of 23°F (-5°C) and lower. During the defrost sequence, the supply blower shuts down & the exhaust blower switches into high speed to maximize the effectiveness of the defrost strategy. The unit then returns to normal operation, and continues cycle.

Temperature range °F (°C)	Run/Defrost cycle (minutes)
23 (-5) to 14 (-10)	40 / 3
14 (-10) to 5 (-15)	30 / 5
5 (-15) & lower	20 / 5

SERVICEABILITY Core, filters, motors and drain pan can be easily accessed through latched door. Core conveniently slides out on our new easy glide core guides. 10" (250mm) of clearance is recommended for removal of core.

DUCT CONNECTION 4" (100mm) steel duct connections with rubber gasket for easy sealing.

DRAIN 1/2" (13mm) OD (outside diameter) drain spout provided, entire bottom of unit covered by pan.

WARRANTY Limited lifetime on aluminum core, 7 year on motors, and 5 year on parts.

Distributed by:

Fantech, reserves the right to modify, at any time and without notice, any or all of its products' features, designs, components and specifications to maintain their technological leadership position.

Dimensions & Airflow - All units feature three foot plug-in power cord with 3-prong plug.

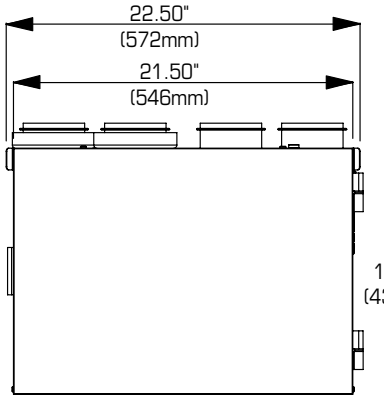

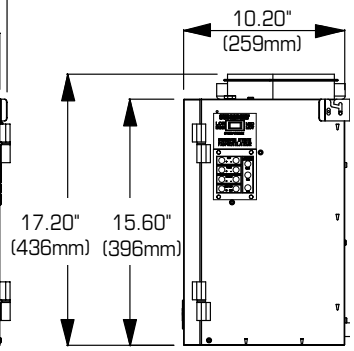

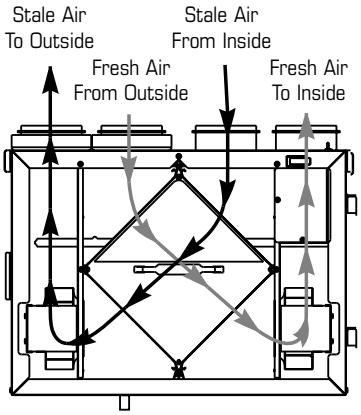

- Continuous ventilation mode of supply and exhaust airstreams
- 10" (254mm) of clearance is recommended for removal of core

Ventilation Performance

EXT. STATIC PRESSURE		NET SUPPLY AIR FLOW		GROSS AIR FLOW SUPPLY		GROSS AIR FLOW EXHAUST	
Pa	in wg	L/s	cfm	L/s	cfm	L/s	cfm
25	0.1	45	96	47	99	49	104
50	0.2	40	85	41	88	41	88
75	0.3	32	67	33	69	34	72
100	0.4	26	56	27	58	28	58
125	0.5	20	42	20	43	20	43

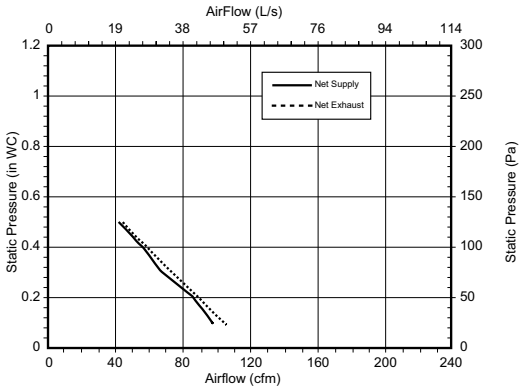

Energy Performance

	SUPPLY TEMPERATURE °C	SUPPLY TEMPERATURE °F	NET AIRFLOW L/s	NET AIRFLOW cfm	POWER CONSUMED WATTS	SENSIBLE RECOVERY EFFICIENCY	APPARENT SENSIBLE EFFECTIVENESS	LATENT RECOVERY/MOISTURE TRANSFER
Heating	0	32	26	55	36	57	67	–
	0	32	32	67	40	55	63	–
	0	32	39	84	40	54	60	–
	-25	-13	34	73	35	53	66	–

Specifications and Ratings

- Model: VHR 704
- Total assembled weight: 26 lbs (12kg)
- Cabinet: 24 ga. steel w/powder coat finish
- Motors: ebm motors w/backward curved blades
- Filters: 2 washable electrostatic filters 8.5" (216mm) x 8" (205mm) x 0.125" (3mm)
- Insulated with 1" (25 mm) aluminum foil-face high density polystyrene foam to prevent condensation and meet the requirements of the UL 94HF.
- Core: Aluminum 8.5" (216mm) x 8.5" (216mm) x 8" (205mm)
- Supply & exhaust ducts: 4" (100mm)
- Mounting: Wall bracket included
- Electrical requirements:

Volts	Frequency	Amps	Watts
115V	60Hz	0.36A	40W

3' plug-in power cord w/ 3-prong plug

Contacts

Submitted by: Date:

Qty: Model #:

Comments:

Project #:

Location:

Architect:

Engineer:

Contractor:

Fantech

United States
10048 Industrial Blvd.
Lenexa, KS 66215
(T) 1.800.747.1762
(F) 1.800.487.9915
(T) 1.913.752.6000
(F) 1.913.752.6466
www.fantech.net
info@fantech.net

Canada
50 Kanalflakt Way,
Bouctouche, NB E4S 3M5
(T) 1.800.565.3548
(F) 1.877.747.8116
(T) 1.506.743.9500
(F) 1.506.743.9600

Article #: 412235
Rev Date: 111612